HARDWOOD FLOORS FOR LESS!
LUMBER LIQUIDATOR$
www.lumberliquidators.com
1-800-HARDWOOD

Supplies included in this carton:

1 – Prefinished medallion
1 – Plywood installation template
1 – 3M Command Adhesive Strips
1 – Router bit with bearing

Additional tools needed:

– A plunge router with a .25 in. (6.3 mm) collet (not to exceed 2 hp)
– Sharp chisel and/or utility knife
– Hammer
– Eye and ear protection
– Wiping rag or cloth

The medallion must be acclimated to the relative moisture level of the job site prior to installation. Consult your local Lumber Liquidators outlet for the proper acclimatization levels or requirements for your area.

Preparing for installing your medallion:

1. To secure plywood template to the floor, wipe clean the corners of plywood and the floor where adhesive tabs are to be applied.Remove red or black paper from strips and apply to side of template marked "this side down." Remove other side of paper from strips and place template on floor where medallion is to be installed.

NOTE: Small tab should stick out beyond edge of plywood template for removal when routing is completed.

NOTE: Position template on flooring so you eliminate small pieces. Attach router bit with bearing to plunge router. Set router bit so bearing is exposed below the router plate base. This setting will plunge cutter knives into floating floor about 1/4 in. (6.35 mm) for first pass around template.

NOTE: Router should cut in a clockwise direction.

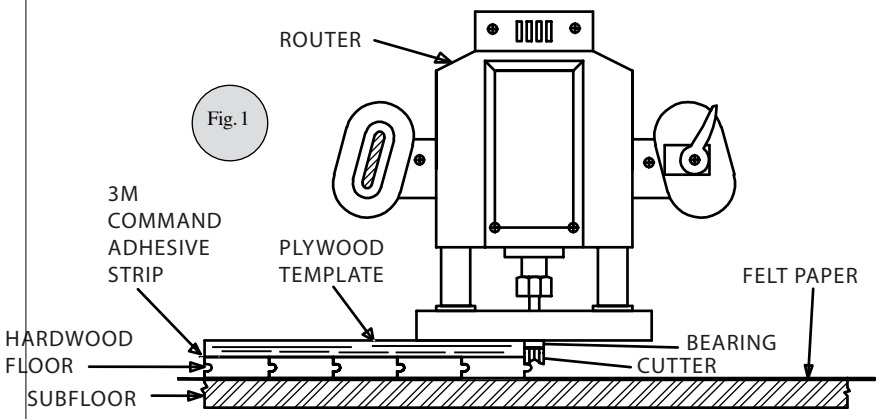

Fig. 1

2. Start router about 1 in. (25.4 mm) away from edge of template and pull or cut back to template cut out area so bearing is riding against inside of template. Plunge or gradually cut down to subfloor using several passes around template. Do not cut through subfloor. Carefully remove template by pulling back on the tape tabs, flush with the floor, and clean out routed area.

Installing your medallion:

4. Spread adhesive evenly onto subfloor into cut-out area, showing peaks and valleys in the adhesive. Use only as much adhesive as necessary to cover cut-out area.

5. Place medallion (face up) into adhesive and press into place.

NOTE: If small gaps or cracks appear around medallion to finished floor, it will be necessary to apply color matching soft filler or color-matching color sticks (crayon type) around medallion. Please follow directions for the product you are using and wipe off with clean rag.

Prevent traffic to area until adhesive has set or at least 24 hours.